THIS DRAWING IS UNPUBLISHED. RELEASED FOR PUBLICATION –,– .
© COPYRIGHT – By – ALL RIGHTS RESERVED.

LOC	DIST
FT	0

REVISIONS

P	LTR	DESCRIPTION	DATE	DWN	APVD
	M3	REVISED PER ECO–11–004587	11MAR11	RK	HMR

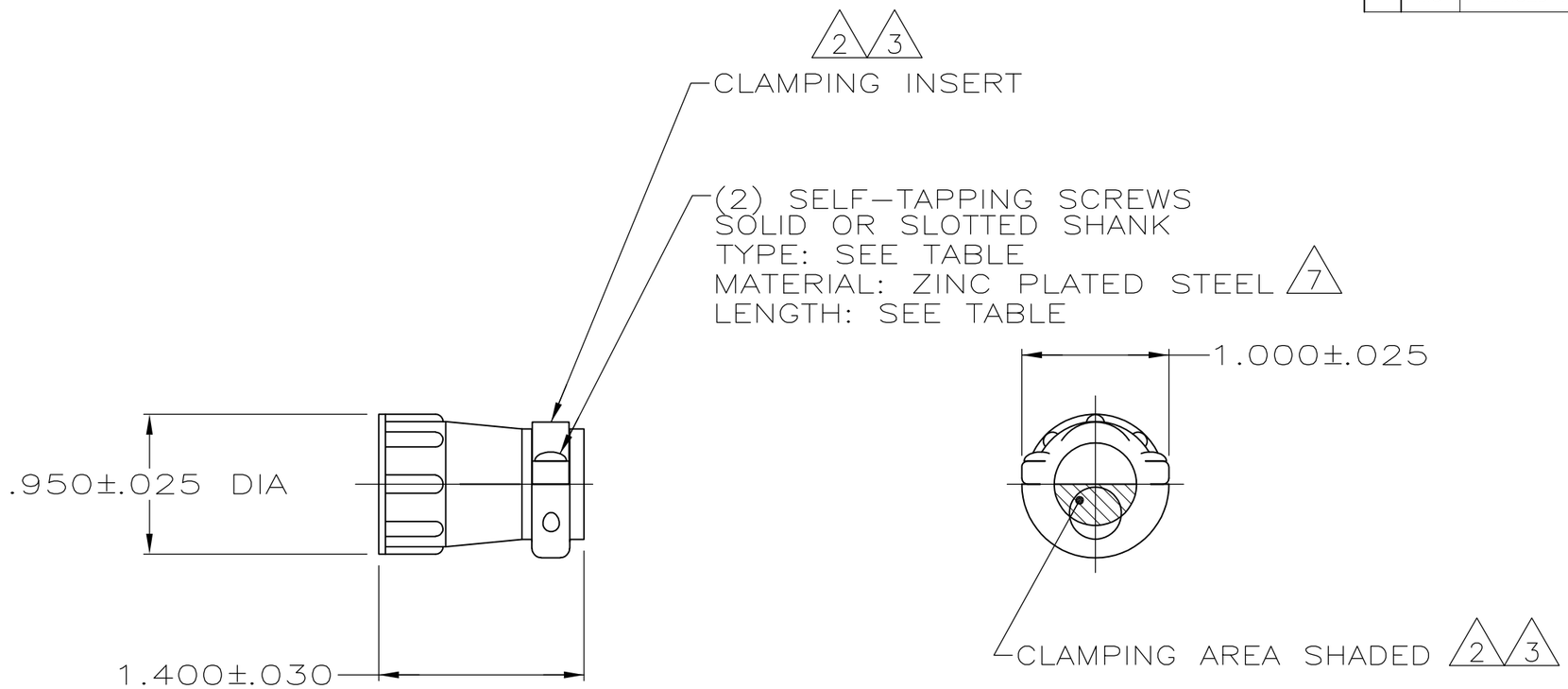

2 7		5 BULK	.50 +.00 −.05	#5–20	206966–9
8 2 7	OBSOLETE	~~SMALL PACK~~	~~.50 +.00 −.05~~	~~#5–20~~	~~206966–8~~
2 7		INDIVIDUAL	.50 +.00 −.05	#5–20	206966–7
8 7	OBSOLETE	~~SMALL PACK~~	~~.50 +.00 −.05~~	~~#5–20~~	~~206966–6~~
2	AMP BRAZIL USE ONLY	INDIVIDUAL	12mm +.0 −.8	3mm–20	6 206966–5
		INDIVIDUAL	.50 +.00 −.05	#5–20	6 206966–4
7	SUPERSEDED BY 206966–9	5 BULK	.50 +.00 −.05	#5–20	206966–2
7	SUPERSEDED BY 206966–7	INDIVIDUAL	.50 +.00 −.05	#5–20	206966–1
		PACKAGING	SCREW LENGTH	SCREW TYPE	PART NUMBER

1 PARTS PACKAGED UNASSEMBLED.

2 CABLE CLAMPING AREA ADJUSTABLE FROM .010 TO .161 SQ IN BY REVERSING CLAMPING INSERTS. (2 INSERTS SUPPLIED).

3 CABLE CLAMPING AREA ADJUSTABLE FROM .010 TO .161 SQ IN BY CHANGING CLAMPING INSERTS. (4 INSERTS SUPPLIED, –4 ONLY).

4 .453 MAXIMUM CABLE OUTSIDE DIAMETER.

5 BULK PACKAGED KITS TO BE ORDERED IN MULTIPLES OF 200 ONLY.

6 OBSOLETE PART NUMBER.

7 ZINC PLATED NON–HEXAVALENT CHROMATE.

8 OBSOLETE PARTS: OBSOLETE CIS STREAMLINING PER D.RENAUD/D.SINISI

THIS DRAWING IS A CONTROLLED DOCUMENT.

DIMENSIONS: INCHES

TOLERANCES UNLESS OTHERWISE SPECIFIED:
0 PLC ± –
1 PLC ± –
2 PLC ± –
3 PLC ± –
4 PLC ± –
ANGLES ± –

MATERIAL: THERMOPLASTIC

FINISH: –

DWN A GRAFF 4/23/91
CHK W.G.LENKER 7–23–92
APVD – –
PRODUCT SPEC 108–10024
APPLICATION SPEC –
WEIGHT –

TE Connectivity

NAME: CABLE CLAMP KIT, STANDARD, SHELL SIZE 13, CPC

SIZE	CAGE CODE	DRAWING NO	RESTRICTED TO
A3	00779	C–206966	–

CUSTOMER DRAWING

SCALE NTS | SHEET 1 OF 1 | REV M3

1470–19 (3/11)